Technical sheet :

1650 R

MANITOU
HANDLING YOUR WORLD

Capacities		Metric
Rated Operating Capacity		748 kg
Rated Operating Capacity with Optional Counterweight		817 kg
Operating Weight - Approximate		2796 kg
Weight and dimensions		
Overall Operating Height - Fully Raised	h27	3876 mm
Height to Hinge Pin – Fully Raised	h28	3023 mm
Overall Height to Top of Rops	h17	1948 mm
Dump angle at full height	a5	38 °
Dump height	h29	2380 mm
Overall length with bucket	l16	3101 mm
Dump reach at full height		579 mm
Rollback at ground		28 °
Seat to ground height	h30	904 mm
Wheelbase	y	988 mm
Overall width less bucket	b1	1544 mm
Bucket Width	e1	1562 mm
Ground clearance	m4	160 mm
Overall length - Less Bucket	l2	2385 mm
Departure angle	a2	21 °
Clearance Radius - Front with Bucket		1869 mm
Clearance Circle - Rear	wa1	1466 mm
Performances		
Travel speed (unladen)		12.6 km/h
Travel Speed with Two-Speed Option - Maximum		19.5 km/h
Wheels		
Standard tyres		10.00x16.5 HD
Engine		
Engine brand		Yanmar
Engine model		4TNV88C-KMS
Gross Power (kW)		52 kW
Net Power (kW)		51 kW
Max. torque / Engine rotation		241 Nm/m / 2500 tr/min
Battery		12 V
Starter (kW)		3 kW
Hydraulics		
Auxiliary hydraulics		71.4 l/min
Auxiliary Hydraulic Pressure		207 Bar
High-Flow Auxiliary Hydraulics – Option (L/min)		94.6 l/min
High-Flow Auxiliary Hydraulics Pressure – Option		200 Bar
Tank capacities		
Fuel tank		62.50 l
Reservoir Capacity Hydraulics		41.60 l
Displacement		3.30 l
Noise and vibration		
Environmental noise (LwA)		101 dB(A)
Noise at driving position (LpA)		85 dB(A)
Whole-Body Vibration (ISO 2631-1)		<0.9 m/s²
Vibration to whole hand/arm		<1.77 m/s²

Dimensional drawing

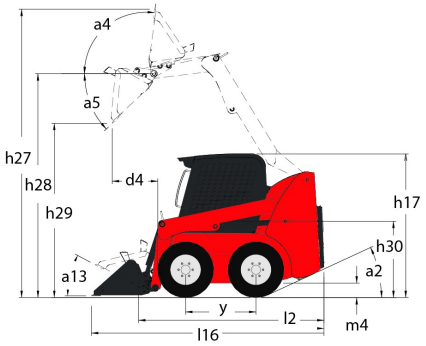

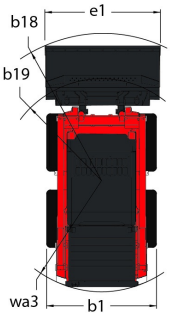

Equipment

Hydrostatic Drive - Servo	Standard
Integral Access Plate (removable)	Standard
Selectable Self-Leveling Hydraulic Lift Action 4	Optional
Lifting function	
All-Tach® Attachment Mounting System	Standard
Auxiliary Hydraulics	Standard
High-Flow Auxiliary Hydraulics	Optional
Power-A-Tach® Attachment Mounting System	Optional
Lighting	
Work Lights - Front and Rear	Standard
Motorization/Power	
Engine Auto-Shutdown System	Standard
Engine Block Heater	Optional
Swing-Out Cooler	Standard
Two-Speed Drive	Optional
Operator station	
Air conditioning with manual adjustment	Optional
Air suspension seat	Optional
Cab Enclosure	Optional
Foot and Hand Throttles 2	Standard
Gehl T-Bar Controls	Optional
Hand/Foot Controls	Optional
Heating	Optional
High-Back Adjustable Seat	Standard
Horn	Standard
Joystick controls	Optional
ROPS/FOPS Level II Overhead Guard	Standard
Sound Reduction Material	Standard
Suspension Seat - Mechanical	Optional
Safety	
Anti-Vandalism Protection	Standard
Back-Up Alarm	Optional
Brake Control (Auto / Manual)	Standard
Hydraloc™ Safety System	Standard
Lift Arm Support Device	Standard
Operator Restraint Bar	Standard

Secondary functions	
Counterweight	Optional
Full Instrumentation	Standard
Hydraglide™ Ride Control 3	Optional

Siège Social
430 rue de l'Aubinière - 44150 Ancenis Cedex - France
Tel: +33(0)2 40 09 10 11 - Fax: +33 (0)2 40 09 10 97
www.manitou.com

This brochure describes versions and configuration options for Manitou products which may be fitted with different equipment. The equipment described in this brochure may be standard, optional or not available depending on version. Manitou reserves the right to change the specifications shown and described at any time and without prior warning. The manufacturer is not liable for the specifications given. For more information, contact your Manitou dealer. Non-contractual document. Product descriptions may differ from actual products. List of specifications is not comprehensive. The logos and visual identity of the company are the property of Manitou and may not be used without authorisation. All rights reserved. The photos and diagrams contained in thisbrochure are provided for information only.
MANITOU BF SA - Limited company with board of directors - Share capital: 39,668,399 euros - 857 802 508 RCS Nantes