Technical sheet

MHT-X 790

Telehandlers

MANITOU
HANDLING YOUR WORLD

Capacities	Metric	Imperial
Max. capacity	9000 kg	19800 lbs
Max. lift height	6.84 m	22 ft 5 in
Max. reach	3.72 m	12 ft 2 in
Weight and dimensions		
l2 - Overall length of fork carriage	5.27 m	17 ft 3 in
b1 - Overall width	2.47 m	8 ft 1 in
h17 - Overall height	2.47 m	8 ft 2 in
y - Wheelbase	2.87 m	9 ft 5 in
m4 - Ground clearance	0.40 m	1 ft 4 in
b4 - Overall cab width	0.93 m	3 ft 1 in
a4 - Tilt-up angle	12 °	12 °
a5 - Tilt-down angle	125 °	125 °
Wa1 - Frame outer turning radius	5.59 m	18 ft 4 in
Unladen weight (with forks)	13160 kg	29013 lbs
Standard forks	1200x200x60	3.93x0.65x0.19
Performances		
Lifting	9.20 s	9.20 s
Lowering	7.80 s	7.80 s
Telescope extension	6.60 s	6.60 s
Retracting the telescope	6.10 s	6.10 s
Scoop	5.30 s	5.30 s
Dump	5.10 s	5.10 s
Engine		
Brand	John Deere	John Deere
Environmental standards	Stage 3A	Stage 3A
Model	4045PWX	4045PWX
Number of cylinders - Capacity	4 - 4500 cm^3	4 - 274.61 in^3
Power	137 hp / 102 kW	137 hp / 102 kW
Max. torque	545 Nm at 1500 rpm	402 ft.lbs at 1500 rpm
Laden drawbar pull	10905 daN	24515 lbf
Transmission		
Type	Hydrostatic	Hydrostatic
Number of gears (forward/reverse)	2/2	2/2
Max. speed of travel (may vary according to the applicable regulation)	31 km/h	19 mph
Parking brake	Automatic negative parking brake	Automatic negative parking brake
Service brake	Hydraulic	Hydraulic
Hydraulics		
Type of pump	Load sensing pump	Load sensing pump
Hydraulic flow rate - Pressure	180 l/min - 270 bar	47.55 gpm - 3916 psi
Tank capacities		
Engine oil	13 l	3.40 US gal.
Hydraulic oil	151 l	39.80 US gal.
Fuel	150 l	39.60 US gal.
Noise & vibration		
Noise at driving position (LpA)	79.70 dB(A)	79.70 dB(A)
Noise to environment (LwA)	103 dB(A)	103 dB(A)
Vibration on hands/arms	<2.5 m/s^2	<8.2 ft/s^2
Miscellaneous		
Steering wheels / Driving wheels	4 / 4	4 / 4
Safety	Standard EN 15000 Cab ROPS - FOPS Level 2	Standard EN 15000 Cab ROPS - FOPS Level 2
Controls	JSM	JSM

Dimensional drawing

Created on July 24, 2018 8:05 AM

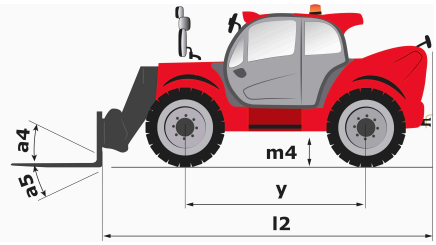

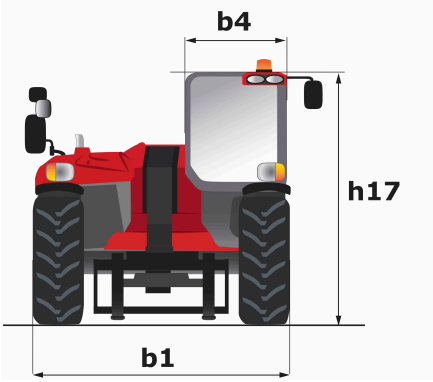

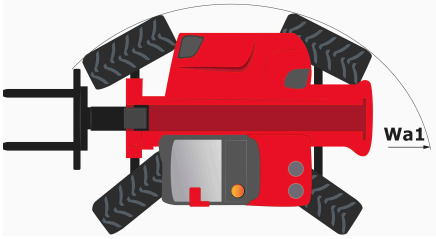

Load chart

Machine on tyres with forks - CoG 600 mm

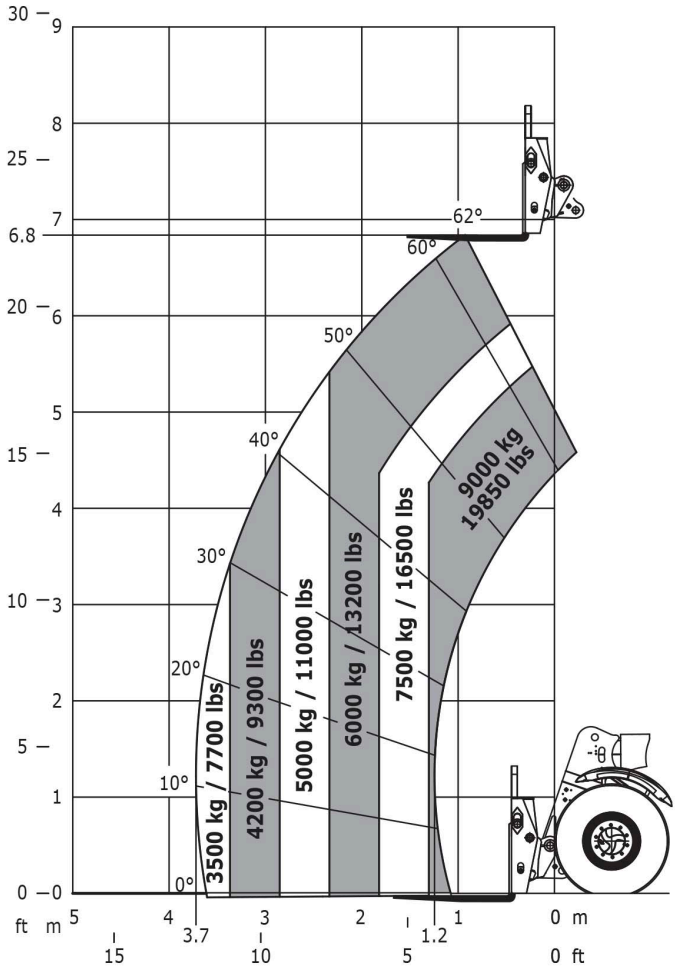

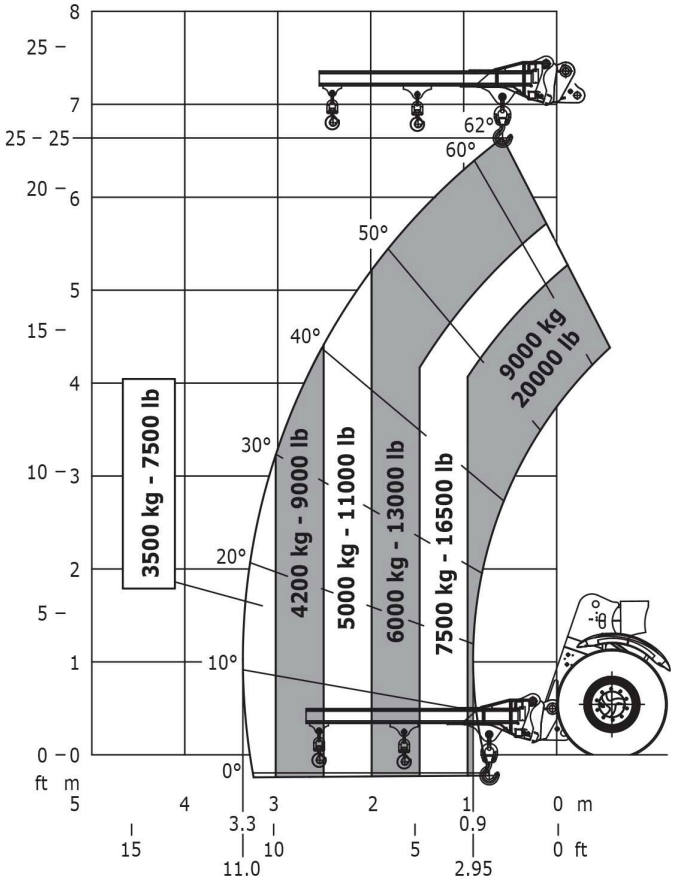

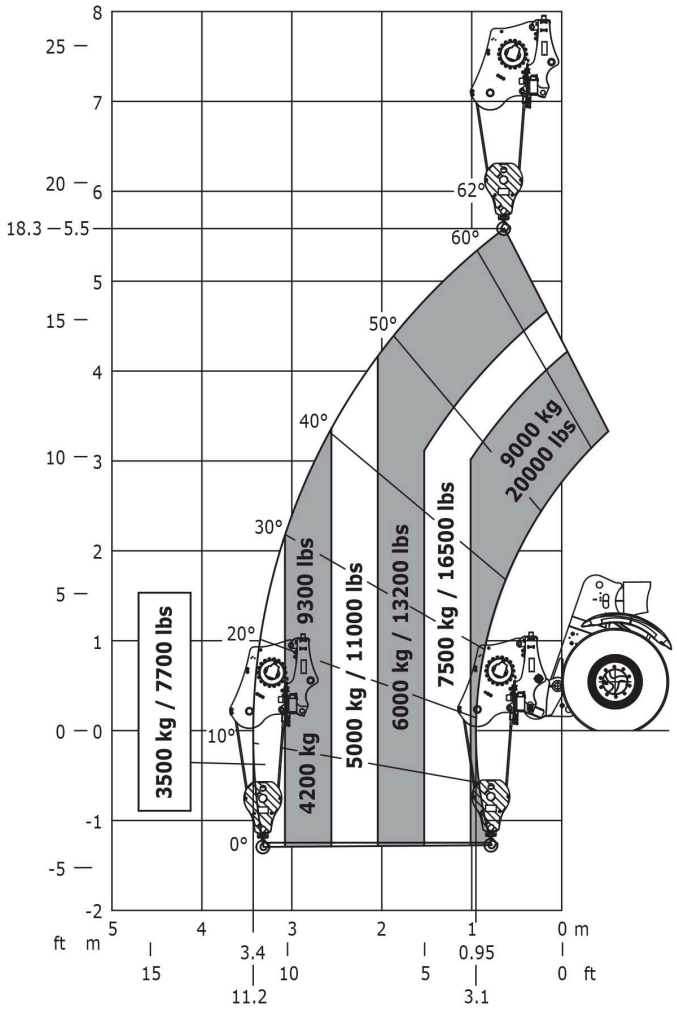
8
25
7
20
6
18.3
5.5
5
15
4
10
3
2
5
1
0
0
-1
-5
-2
62°
60°
50°
40°
30°
20°
10°
0°
3500 kg / 7700 lbs
4200 kg
9300 lbs
5000 kg / 11000 lbs
6000 kg / 13200 lbs
7500 kg / 16500 lbs
9000 kg
20000 lbs
ft m
5 4 3 2 1 0 m
15 3.4 10 5 0.95 0 ft
11.2 3.1

MANITOU
HANDLING YOUR WORLD

Siège Social
430 rue de l'Aubinière - 44150 Ancenis Cedex - France
Tel: +33(0)2 40 09 10 11 - Fax: +33 (0)2 40 09 10 97
www.manitou.com

This brochure describes versions and configuration options for Manitou products which may be fitted with different equipment. The equipment described in this brochure may be standard, optional or not available depending on version. Manitou reserves the right to change the specifications shown and described at any time and without prior warning. The manufacturer is not liable for the specifications given. For more information, contact your Manitou dealer. Non-contractual document. Product descriptions may differ from actual products. List of specifications is not comprehensive. The logos and visual identity of the company are the property of Manitou and may not be used without authorisation. All rights reserved. The photos and diagrams contained in thisbrochure are provided for information only.
MANITOU BF SA - Limited company with board of directors - Share capital: 39,547,824 euros - 857 802 508 RCS Nantes